260-601225 SURVEY No.S30022,B21452

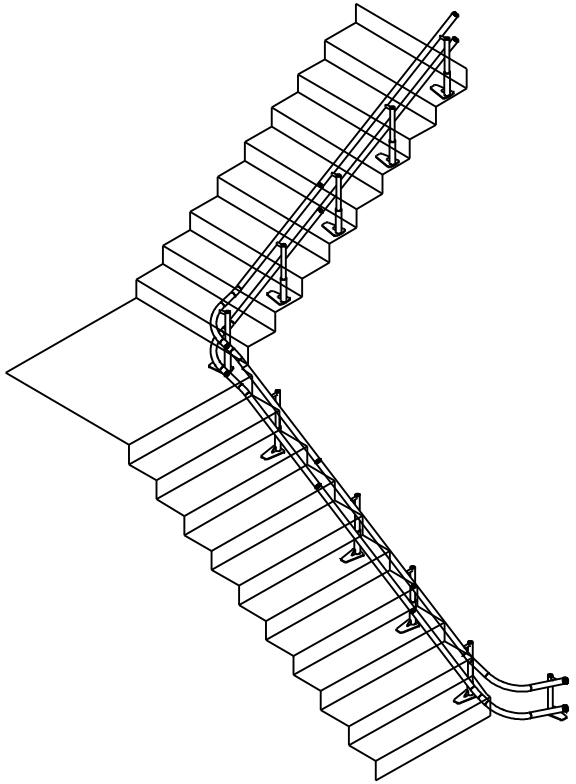

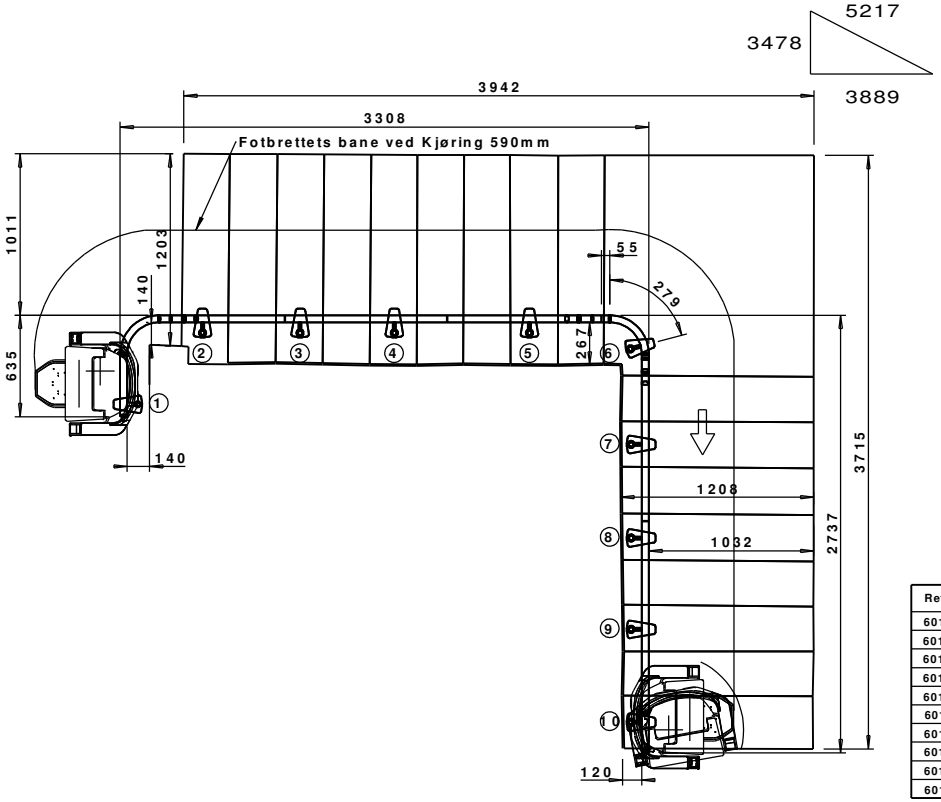


| Section | Support | Type | Base | Tube | Height |
|---|---|---|---|---|---|
| A | 1 | F | ADJ | ADJ1 | 310 |
| A | 2 | F | 3 | C | 462 |
| B | 3 | F | 6 | C | 501 |
| B | 4 | F | 6 | C | 518 |
| C | 5 | F | 6 | C | 525 |
| D | 6 | F | 6 | C | 524 |
| D | 7 | F | 6 | C | 498 |
| E | 8 | F | 6 | C | 506 |
| E | 9 | F | 6 | C | 498 |
| E | 10 | F | 6 | C | 502 |

DWG.NO.260-601225

IF CONTRACT OK PLEASE SIGN

IF NOT, PLEASE AMEND AND FAX TO RAIL DESIGN DEPT 01264 341506

| Reference | Tools | Length | End | Sect | Datum | Helical-Rad | S/H |
|---|---|---|---|---|---|---|---|
| 601225BA | 194.22 373.07 | | 1367 | 700 | 711 | 18°-R200 | |
| 601225BB | - | | 1200 | 639 | 1350 | | |
| 601225BC | 319.8 | | 1113 | 550 | 1900 | | |
| 601225BD | 194.22 373.07 | | 1489 | 735 | 2635 | 18°-R200 | |
| 601225BE | - | | 1672 | 854 | 3489 | | |
| 601225TA | 194.22 319.8 | | 1355 | 675 | 940 | 18°-R200 | |
| 601225TB | - | | 1200 | 639 | 1580 | | |
| 601225TC | 373.07 | | 1125 | 575 | 2155 | | |
| 601225TD | 194.22 319.8 | | 1478 | 713 | 2867 | 18°-R200 | |
| 601225TE | - | | 1672 | 854 | 3721 | | |

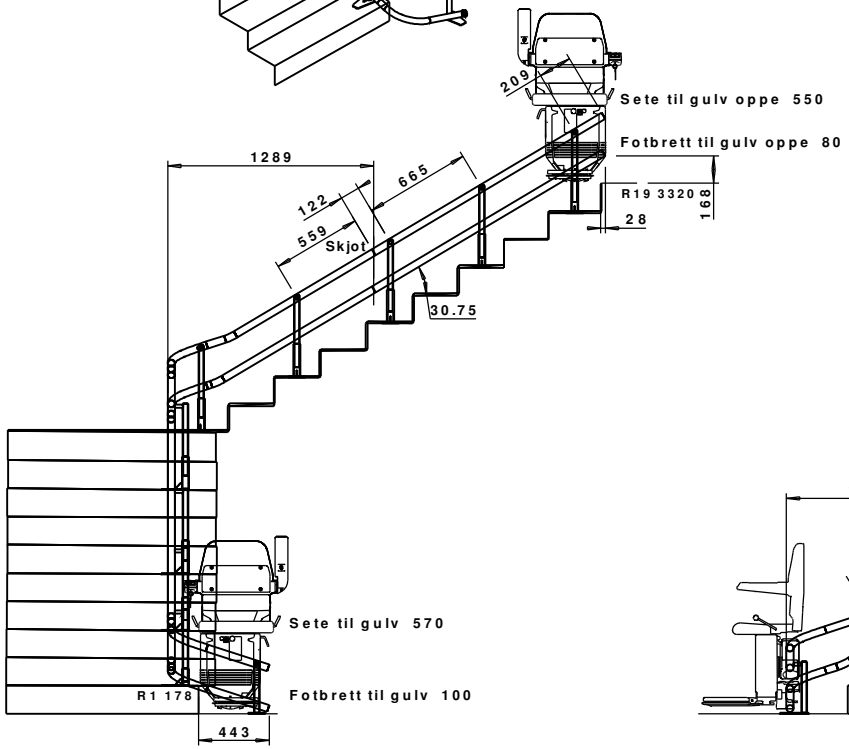


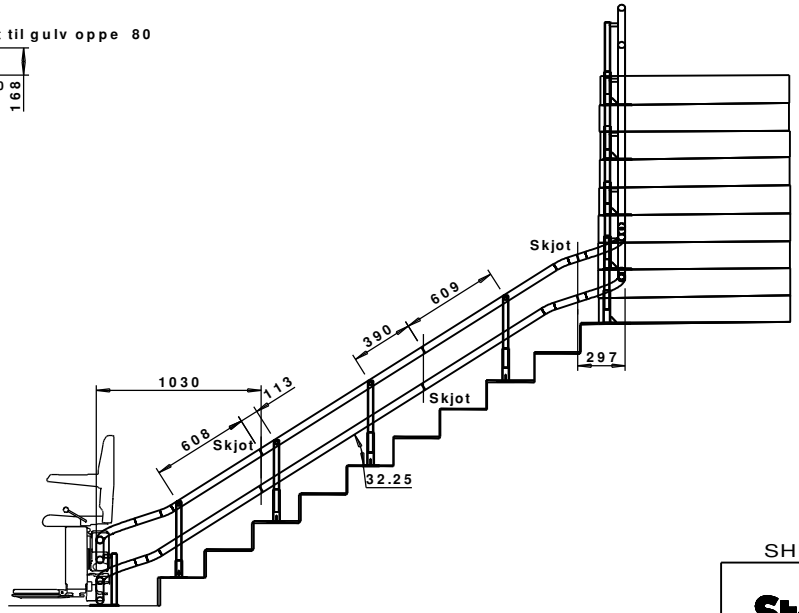


Notes:-
Rail support legs are fixed direct to floor and stairs.
Dimensions to wall and floor are nominal only due to normal building tolerances.
All dimensions are in millimetres.
Conversion ratio 25.4mm = 1 inch
Base plate thickness = 6mm

STAIRLIFT SPECIFICATION:

STAIRCASE TYPE = C
200 INSIDE BEND 90 2 NO. OFF

Carriage type:260 DC (BATTERY)
Rail Colour: PEARL

| Points | Hand RIGHT |
|---|---|
| No. of Sections 5 | Length 7300 |

PE601225

SCALE 1:33.3

| | | | | |
|---|---|---|---|---|
| Square Ness & U Bends | I/B | -5/+15 | Ride Quality | -/+2° |
| | O/B | -15/+5 | Upper Flights | -20/+20 |
| Vertical Height | | -10/+20 | Lower Flight | -10/+20 |

SHEET 1 OF 1

Stannah

Access AS, PO Box 430
CUSTOMER REF. S30022/B21452 Fotterapeuten

DRAWN M.Stevens
DATE 26/03/2014
DRAWING NUMBER 260-601225

Issue Checked By:MS

DRAWING 601225 910944-730